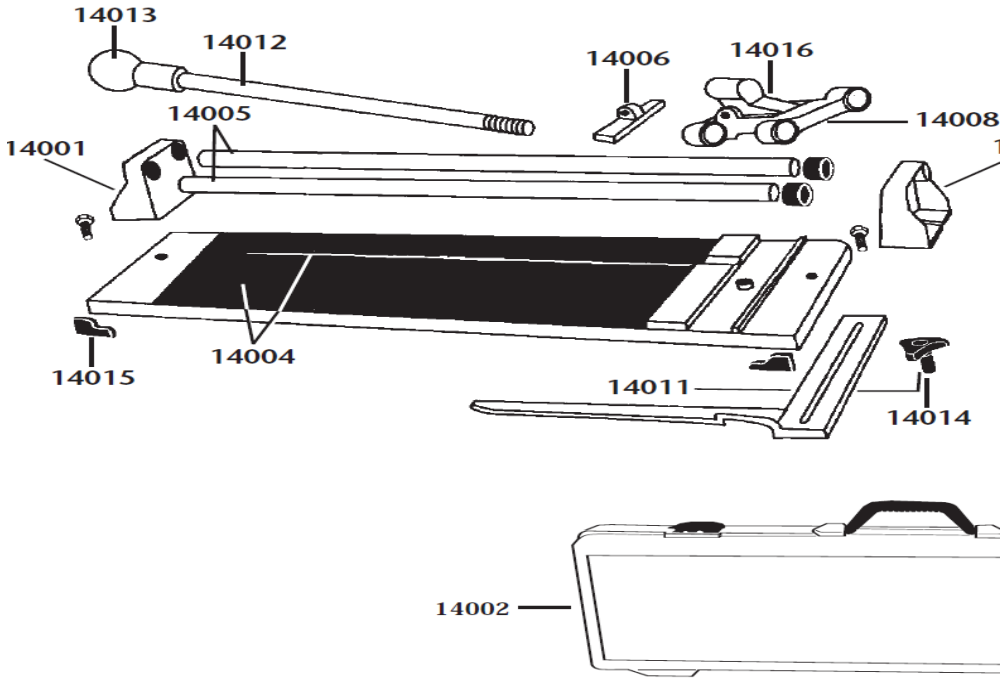Q.E.P. Catalog #	Product Description
14in. Monocottura Tile Cutter 14000	
14000*	Box
14001	End Bracket
14002	Case
14004	Replacemt Pads L&R
14005	Rails - (Pack Of 2)
14006	Breaker Bar
14008	Slide Assembly
14011	Guide
14012	Handle Only
14013	Knob Only
14014	Guide Nut
14015	Cushion Bases (Pack Of 4)
14016	Yoke